EMC TEST REPORT

For

Nanyou cable (Shanghai) Co., Ltd.

NY-CABLE

MODEL: DRAG300A,DRAG300P,DRAG300SP,DRAG300VP,DRAG600,DRAG600A, DRAG300SVP,DRAG300SP,DRAG800,DRAG800A,DRAG800P, DRAG800VP,DRAG800SP,DRUM500,DRUM800,F300VFB,F300,F300FF, SERV0400,SERV0430,PI60,PI80,PI60,FW,FW2000,TRVV,RVV-NBR,YVFB, YFFB,YVFBG,YFFBG,RVV1G,RVV2G,RVVY,RVVP,PUR800,"DRAGX, DRAGXA,DRAGXP,DRAGXVP,DRAGXVP,DRAGXA,DRAGXSP, DRAGXVP,DRAGXSP,DRAGXSVP,DRUMX,FXVFB,FX,FXFF,SERVX, PX,FWX,TRVVX,RVVX,YVFBX,YFFBX,YVFBGX,YFFBGX,YFFBGX, RVVXG,RVVYX,RVVPX,PURX, TW05, TW05U, TWX, "X" can be 0000-9999"

Prepared for : **Nanyou cable (Shanghai) Co., Ltd.**

Building 2, Lane 4880, Hunan Highway, Pudong New District, Shanghai

Prepared by : **Beide (Shenzhen) Product Service Limited**

China: 6F, Bldg E, Hourui 3rd Ind Zone, Xixiang, Bao'an Dist, Shenzhen, China

Report Number: **B-E2210A3605**
Date of Test: **2022-10-20 to 2022-10-26**
Date of Report: **2022-10-26**

Beide
Compliance Laboratory

TABLE OF CONTENT

Description Page

Test Report Declaration
1. TEST RESULTS SUMMARY 5
2. GENERAL INFORMATION 6
2.1. Report Information 6
2.2. Description of Device (EUT) 6
2.3. Test Facility 6
2.4. Test Uncertainty 6
2.5. Test Condition 7
2.6. Test Conditions 7
2.7. Performance Criterion 7
3. TEST INSTRUMENT USED 8
3.1. For Conducted Emission Test 8
3.2. For Radiation Emission Test 8
3.3. For Harmonic / Flicker Test 8
3.4. For Electrostatic Discharge Immunity Test 8
3.5. For Radio Frequency Electromagnetic Field 9
3.6. For Electrical Fast Transient/Burst Test 9
3.7. For Surge Test 9
3.8. For Injected Currents Susceptibility Test 9
3.9. For Magnetic Field Immunity Test 9
3.10. For Voltage Dips and Interruptions Test 9
4. POWER LINE CONDUCTED EMISSION TEST 10
4.1. Block Diagram of Test Setup 10
4.2. Test Standard 10
4.3. Power Line Conducted Emission Limit 10
4.4. EUT Configuration on Test 10
4.5. Operating Condition of EUT 11
4.6. Test Procedure 11
4.7. Power Line Conducted Emission Test Results 11
5. RADIATION EMISSION TEST 12
5.1. Block Diagram of Test Setup 12
5.2. Test Standard 12
5.3. Radiation Emission Limit 12
5.4. EUT Configuration on Test 12
5.5. Operating Condition of EUT 13
5.6. Test Procedure 13
5.7. Radiation Emission Test Results 13
6. HARMONIC CURRENT EMISSION TEST 14
6.1. Block Diagram of Test Setup 14
6.2. Test Standard 14
6.3. Operating Condition of EUT 14
6.4. Test Results 14
7. VOLTAGE FLUCTUATIONS & FLICKER TEST 15
7.1. Block Diagram of Test Setup 15
7.2. Test Standard 15
7.3. Operating Condition of EUT 15
7.4. Test Results 15
8. ELECTROSTATIC DISCHARGE TEST 16
8.1. Block Diagram of Test Setup 16
8.2. Test Standard 16
8.3. Severity level and Performance criterion 17

8.4. EUT Configuration on Test 17
8.5. Operating Condition of EUT 17
8.6. Test Procedure 17
8.7. Test Results 17
9. RF FIELD STRENGTH SUSCEPTIBILITY TEST 19
9.1. Block Diagram of Test Setup 19
9.2. Test Standard 19
9.3. Severity level and Performance criterion 19
9.4. EUT Configuration on Test 19
9.5. Operating Condition of EUT 20
9.6. Test Procedure 20
9.7. Test Results 20
10. ELECTRICAL FAST TRANSIENT/BURST TEST 22
10.1. Block Diagram of Test Setup 22
10.2. Test Standard 22
10.3. Severity level and Performance criterion 22
10.4. EUT Configuration on Test 23
10.5. Operating Condition of EUT 23
10.6. Test Procedure 23
10.7. Test Results 23
11. SURGE TEST 25
11.1. Block Diagram of Test Setup 25
11.2. Test Standard 25
11.3. Severity level and Performance criterion 25
11.4. EUT Configuration on Test 25
11.5. Operating Condition of EUT 25
11.6. Test Procedure 26
11.7. Test Results 26
12. INJECTED CURRENTS SUSCEPTIBILITY TEST 28
12.1. Block Diagram of Test Setup 28
12.2. Test Standard 28
12.3. Severity Levels and Performance Criterion 28
12.4. EUT Configuration on Test 28
12.5. Operating Condition of EUT 28
12.6. Test Procedure 29
12.7. Test Results 29
13. MAGNETIC FIELD IMMUNITY TEST 31
13.1. Block Diagram of Test Setup 31
13.2. Test Standard 31
13.3. Severity Levels and Performance Criterion 31
13.4. EUT Configuration on Test 32
13.5. Operating Condition of EUT 32
13.6. Test Procedure 32
13.7. Test Results 32
14. VOLTAGE DIPS AND INTERRUPTIONS TEST 34
14.1. Block Diagram of Test Setup 34
14.2. Test Standard 34
14.3. Severity level and Performance criterion 34
14.4. EUT Configuration 34
14.5. Operating Condition of EUT 35
14.6. Test Procedure 35
14.7. Test Results 35

APPENDIX I (EUT PHOTOS) (1 pages)

TEST REPORT DECLARATION

Applicant	:	Nanyou cable (Shanghai) Co., Ltd.
Address	:	Building 2, Lane 4880, Hunan Highway, Pudong New District, Shanghai
Client ID	:	CA3936
Report Query	:	CERTIFICATE QUERY
Manufacturer	:	Same As Holder
EUT Description	:	NY-CABLE
Model No.	:	See Page1
Remark	:	Use DRAG300 do all tests
Power Supply	:	300V/500V

Test Procedure Used:
EN 61000-6-3:2007+A1:2011; EN IEC 61000-3-2:2019+A1:2021;
EN 61000-3-3:2013+A1:2019;
EN IEC 61000-6-1:2019 (EN 61000-4-2:2009,EN 61000-4-3:2006+A2:2010,
EN 61000-4-4:2012,EN 61000-4-5:2014+A1:2017,
EN 61000-4-6:2014+AC:2015,EN 61000-4-8:2010,
EN 61000-4-11:2004+A1:2017)

The device described above is tested by Beide(Shenzhen)Product Service Limited to determine the maximum emission levels emanating from the device, the severe levels which the device can endure and EUT's performance criterion. The test results are contained in this test report. Beide(Shenzhen)Product Service Limited is assumed of full responsibility for the accuracy and completeness of these tests.

This report applies to above tested sample only and shall not be reproduced in part without written approval of Beide(Shenzhen)Product Service Limited.
Note: P=PASS, F=Fail, N/A= Not Applicable

Date of Test : 2022-10-20 to 2022-10-26

Prepared by : Sophia jiang
(Sophia jiang)

Checked by : Austin.zhong
(Austin zhong)

Approved by : Martin Wang
(Martin wang)

BEIDE (SHENZHEN) PRODUCT SERVICE LIMITED Beide Compliance Laboratory CERTIFICATION

1.TEST RESULTS SUMMARY

Test Results Summary

	Test Items	Test Results
1	Conducted Disturbance Test	N/A
2	Radiation Emission Test	N/A
3	Harmonic Current Emission Test	N/A
4	Voltage Fluctuations & Flicker Test	N/A
5	Electrostatic Discharge Test	PASS
6	Radio Frequency Electromagnetic Field	N/A
7	Electrical Fast Transient/Burst Test	N/A
8	Surge Test	N/A
9	Injected Currents Susceptibility Test	N/A
10	Magnetic Field Immunity Test	N/A
11	Voltage Dips And Interruptions Test	N/A

2.GENERAL INFORMATION

2.1.Report Information

2.1.1. This report is not a certificate of quality, it only applies to the sample of the specific product/equipment given at the time of its testing. The results are not used to indicate or imply that they are application to the similar items. In addition, such results must not be used to indicate or imply that BEIDE approves recommends or endorses the manufacture, supplier or use of such product/equipment, or that BEIDE in any way guarantees the later performance of the product/equipment.

2.1.2. The sample/s mentioned in this report is/are supplied by applicant, BEIDE therefore assumes no responsibility for the accuracy of information on the brand names, model number, origin of manufacture or any information supplied.

Additional copies of the report are available to the applicant at an additional fee. No third part can obtain a copy of this report through BEIDE, unless the applicant has authorized BEIDE in writing to do so.

2.2.Description of Device (EUT)

Description	:	NY-CABLE
Number Model	:	DRAG300
Applicant	:	Nanyou cable (Shanghai) Co., Ltd. Building 2, Lane 4880, Hunan Highway, Pudong New District, Shanghai
Manufacturer	:	Nanyou cable (Shanghai) Co., Ltd. Building 2, Lane 4880, Hunan Highway, Pudong New District, Shanghai

2.3.Test Facility

Site Description

Tested by	:	Beide (Shenzhen) Product Service Limited
Site Location	:	6F, Bldg E, Hourui 3rd Ind Zone, Xixiang, Bao’an Dist, Shenzhen, China

2.4.Test Uncertainty

Conducted Emission Uncertainty = ±2.66dB
Radiated Emission Uncertainty = ±4.26dB

2.5.Test Condition

Test Mode: ON

2.6.Test Conditions

Temperature: 22℃-28℃
Relative Humidity: 45%-58%

2.7.Performance Criterion

Performance criterion **A**:

The equipment shall continue to operate as intended during the test.
No change of actual operating state (for example change of channel) is allowed as a result of the application of the test.
Multifunction equipment shall for each function meet the relevant requirements.
Evaluation is carried out for audio and video functions.

Performance criterion **B**:

The equipment shall continue to operate as intended after the test. No loss of function is allowed after the test when the apparatus is used as intended. But failures which are recovered automatically but which cause temporary delay in processing, are permissible. No change of actual operating state for example change of channel or stored data and settings is allowed as a result of the application of the test. During the test, degradation of performance is allowed.

3.TEST INSTRUMENT USED

3.1.For Conducted Emission Test

Item	Equipment	Manufacturer	Model No.	Serial No.	Last Cal.	Cal. Interval
1.	Spectrum analyzer	ADVANTEST	R3261C	51720141	2022.05.05	1 Year
2.	EMI Test receiver	R&S	ESS	92822-1	2022.05.05	1Year
3.	Pre Amplifier	Anritsu	MH648A	0983	2022.05.05	1Year
4.	LISN	Kyoritsu	KNW-242C	23-2	2022.05.05	NCR
5.	RF Selector	TOYO	NS4000	432099	NCR	1 Year

3.2.For Radiation Emission Test

Item	Equipment	Manufacturer	Model No.	Serial No.	Last Cal.	Cal. Interval
1.	EMC Analyzer	Agilent	E7402A	7233	2022.05.05	1 Year
2.	EMI Test receiver	R&S	ESS	92822-1	2022.05.05	1 Year
3.	Pre Amplifier	Anritsu	MH648A	0983	2022.05.05	1 Year
4.	Bilog Antenna	SCHAFFNER	CBL6111C	9332	2022.05.05	1 Year
5.	RF Selector	TOYO	NS4901A	22302	NCR	NCR
6.	Turn Disc	HD	DS4901A	0292833	NCR	NCR
7.	Antenna Mast	HD	MA2400	09334	NCR	NCR

3.3.For Harmonic / Flicker Test

Item	Equipment	Manufacturer	Model No.	Serial No.	Last Cal.	Cal. Interval
1.	Signal Conditioning Unit	SCHAFFNER	CCN1000-1	23980/7	2022.05.05	1 Year
2.	Signal Phase Impedance Network	SCHAFFNER	INA2152	0929-2	2022.05.05	1 Year
3.	75KVA AC Power Source	SCHAFFNER	NSG1007	2983332	2022.05.05	1 Year

3.4.For Electrostatic Discharge Immunity Test

Item	Equipment	Manufacturer	Model No.	Serial No.	Last Cal.	Cal. Interval
1.	ESD Tester	Noiseken	ESS-200AX	0223	2022.05.05	1 Year

3.5.For Radio Frequency Electromagnetic Field

Item	Equipment	Manufacturer	Model No.	Serial No.	Last Cal.	Cal. Interval
1.	Signal Generator	IFR	2032	203002/100	2022.05.05	1 Year
2.	Amplifier	A&R	150W1000	301584	2022.05.05	1 Year
3.	Dual Directional Coupler	A&R	DC6080	301508	2022.05.05	1 Year
4.	Power Head	A&R	PH2000	301193	2022.05.05	1 Year
5.	Power Meter	A&R	PM2002	302799	2022.05.05	1 Year
6.	Field Monitor	A&R	FM5004	300329	2022.05.05	1 Year
7.	Field Probe	A&R	FP5000	300221	2022.05.05	1 Year

3.6.For Electrical Fast Transient/Burst Test

Item	Equipment	Manufacturer	Model No.	Serial No.	Last Cal.	Cal. Interval
1.	Ultra Compact Simulator	EM TEST	UCS500M6	0500-19	2022.05.05	1 Year

3.7.For Surge Test

Item	Equipment	Manufacturer	Model No.	Serial No.	Last Cal.	Cal. Interval
1.	Surge Tester	HAEFELY	PSURGE4.1	080107-04	2022.05.05	1 Year

3.8.For Injected Currents Susceptibility Test

Item	Equipment	Manufacturer	Model No.	Serial No.	Last Cal.	Cal. Interval
1.	Signal Generator	IFR	2032	203002/100	2022.05.05	1 Year
2.	Amplifier	A&R	150W1000	301584	2022.05.05	NCR

3.9.For Magnetic Field Immunity Test

Item	Equipment	Manufacturer	Model No.	Serial No.	Last Cal.	Cal. Interval
1.	Magnetic Field Tester	HAEFELY	MAG100	250040.1	2022.05.05	1 Year

3.10.For Voltage Dips and Interruptions Test

Item	Equipment	Manufacturer	Model No.	Serial No.	Last Cal.	Cal. Interval
1.	Dips Tester	HEAFELY	PLINE 1610	083732-18	2022.05.05	1 Year

4.POWER LINE CONDUCTED EMISSION TEST

4.1.Block Diagram of Test Setup

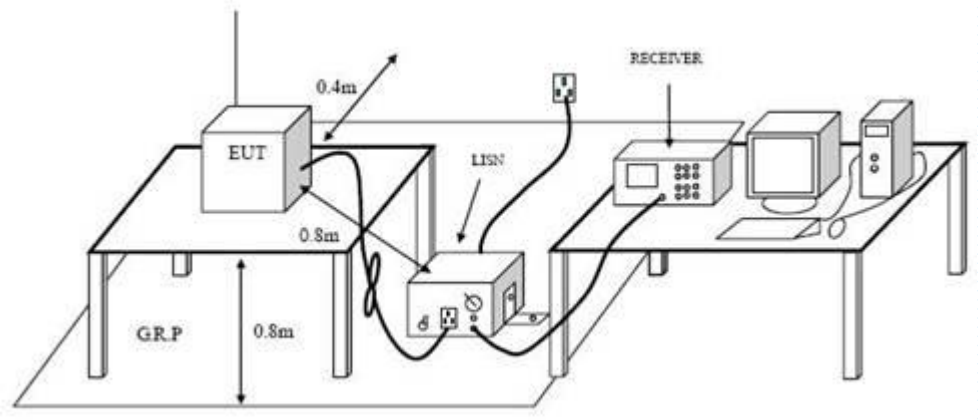

4.2.Test Standard

EN 61000-6-3:2007+A1:2011

4.3.Power Line Conducted Emission Limit

Frequency MHz	Limits dB(μV)	
	Quasi-peak Level	Average Level
0.15 ~ 0.50	66 ~ 56*	56 ~ 46*
0.50 ~ 5.00	56	46
5.00 ~ 30.00	60	50

Notes: 1. *Decreasing linearly with logarithm of frequency.
2. The lower limit shall apply at the transition frequencies.

4.4.EUT Configuration on Test

The following equipments are installed on conducted emission test to meet the test requirement and operating in a manner, which tends to maximize its emission characteristics in a normal application.

4.4.1. NY-CABLE
Model Number : DRAG300
Manufacturer : Nanyou cable (Shanghai) Co., Ltd.

4.5.Operating Condition of EUT

4.5.1. Setup the EUT and simulators as shown in Section 4.1.

4.5.2. Turn on the power of all equipments.

4.5.3. Let the EUT work in test mode (ON) and test it.

4.6.Test Procedure

The EUT is put on the ground and connected to the AC mains through an Artificial Mains Network (L.I.S.N.). This provided 50ohm-coupling impedance for the tested equipments. Both sides of AC line are checked to find out the maximum conducted emission levels according to the EN 61000-6-3 regulations during conducted emission test.

The bandwidth of the test receiver (R&S Test Receiver ESS) is set at 10kHz.

The frequency range from 150 kHz to 30 MHz is investigated.

4.7.Power Line Conducted Emission Test Results

N/A

5.RADIATION EMISSION TEST

5.1.Block Diagram of Test Setup

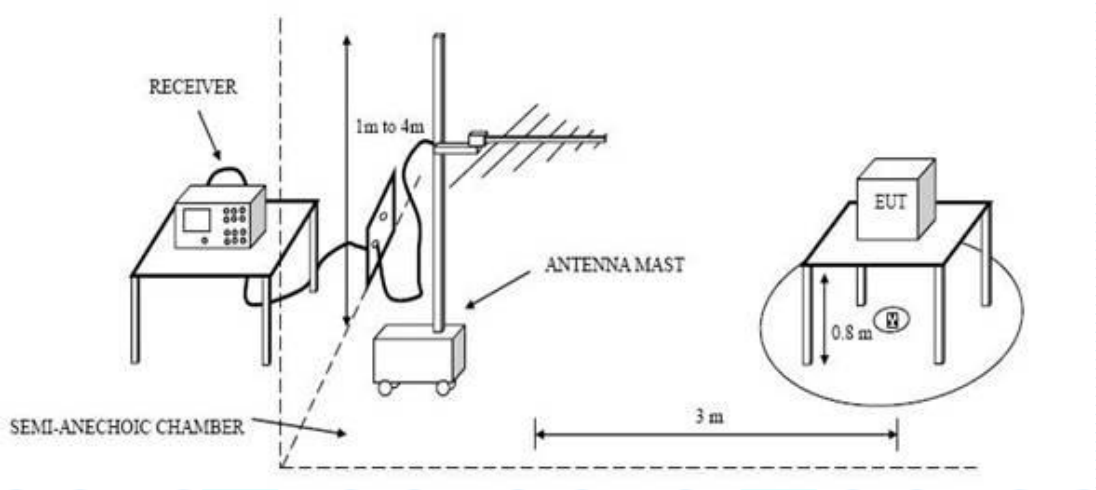

5.2.Test Standard

EN 61000-6-3:2007+A1:2011

5.3.Radiation Emission Limit

All emanations from a Class B computing devices or system, including any network of conductors and apparatus connected thereto, shall not exceed the level of field strengths specified below:

FREQUENCY (MHz)	DISTANCE (Meters)	FIELD STRENGTHS LIMITS (dBμV/m)
30 ~ 230	3	40
230 ~ 1000	3	47

Notes: 1. The tighter limit shall apply at the edge between two frequency bands.
2. Distance refers to the distance in meters between the measuring instrument antenna and the closed point of any part of the EUT.

5.4.EUT Configuration on Test

The test Class B regulations test method must be used to find the maximum emission during radiated emission test.
The configuration of EUT is same as used in the test.

5.5.Operating Condition of EUT

5.5.1. Setup the EUT as shown on Section 5.1.
5.5.2. Turn on the power of all equipments.
5.5.3. Let the EUT work in test mode (ON) and measure it and test it.

5.6.Test Procedure

The EUT is placed on a turn table which is 0.8 meter above ground. The turn table can rotate 360 degrees to determine the position of the maximum emission level. The EUT is set 3 meters away from the receiving antenna which is mounted on a antenna tower. The antenna can move up and down between 1 to 4 meters to find out the maximum emission level. Broadband antenna(calibrated by dipole antenna) are used as a receiving antenna. Both horizontal and vertical polarization of the antenna is set on test.

The bandwidth setting on the test receiver(R&S TEST RECEIVER ESS) is 120kHz. The EUT is tested in Anechoic Chamber.

5.7.Radiation Emission Test Results

N/A

6.HARMONIC CURRENT EMISSION TEST

6.1.Block Diagram of Test Setup

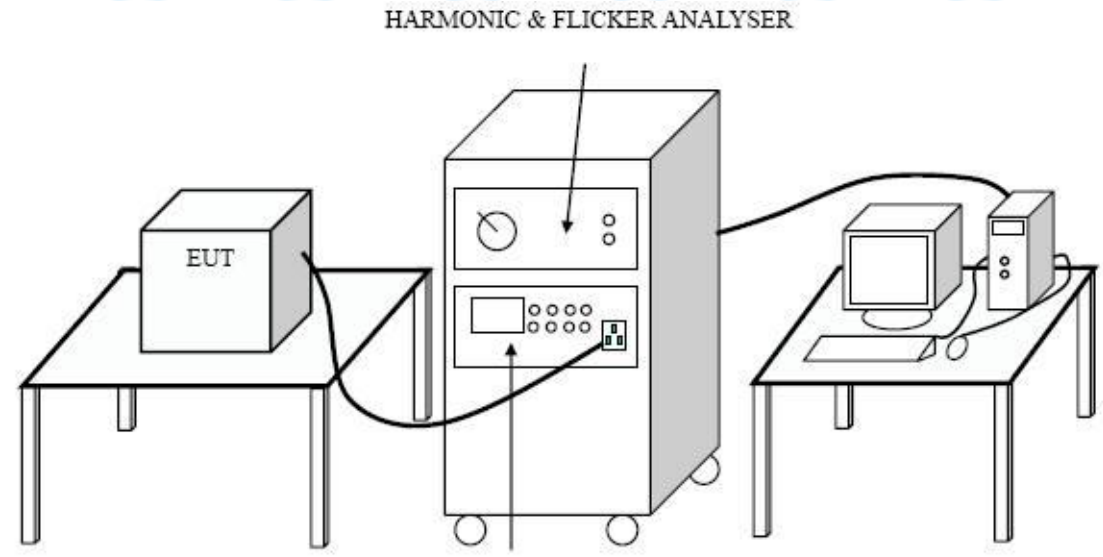

6.2.Test Standard

EN IEC61000-3-2:2019+A1:2021, Class-A

6.3.Operating Condition of EUT

Same as Section 4.5 except the test set up replaced by Section 6.1.

6.4.Test Results

N/A

7.VOLTAGE FLUCTUATIONS & FLICKER TEST

7.1.Block Diagram of Test Setup

Same as Section 6.1.

7.2.Test Standard

EN 61000-3-3:2013+A1:2019

7.3.Operating Condition of EUT

Same as Section 4.5 except the test set up replaced by Section 7.1.

7.4.Test Results

N/A

8.ELECTROSTATIC DISCHARGE TEST

8.1.Block Diagram of Test Setup

8.1.1. Block Diagram of ESD Test Setup (Direct Discharge)

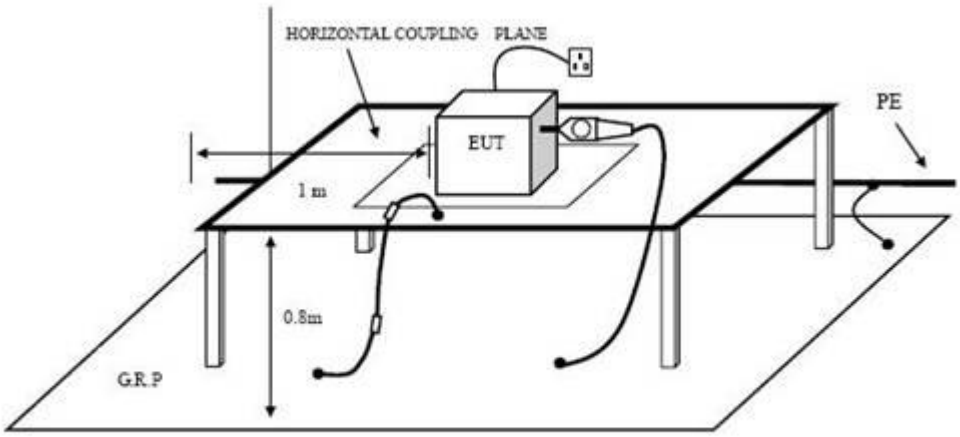

DIRECT DISCHARGE SETUP

8.1.2. Block Diagram of ESD Test Setup (Indirect Discharge)

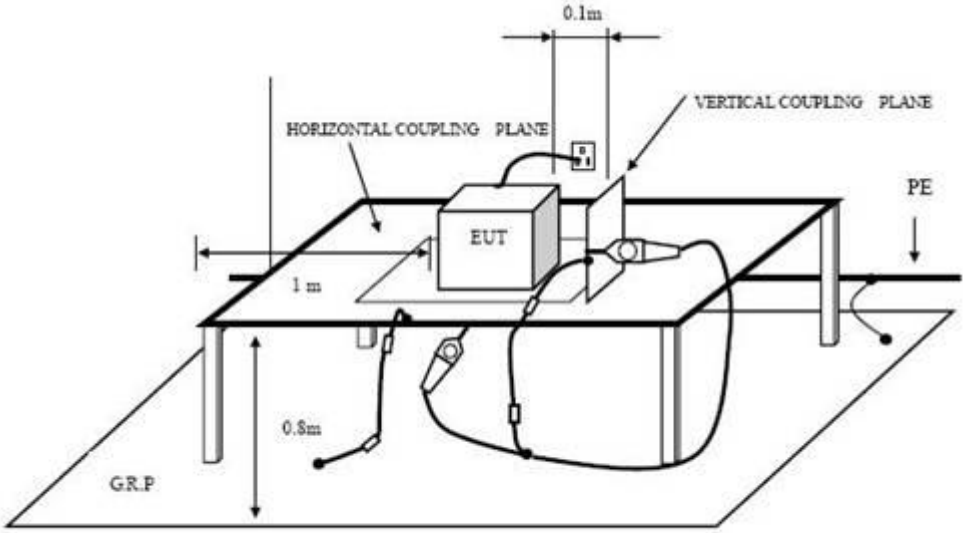

INDIRECT DISCHARGE SETUP

8.2.Test Standard

EN IEC 61000-6-1:2019 (EN 61000-4-2:2009)
Severity Level 3 for Air Discharge at 8kV
Severity Level 2 for Contact Discharge at 4kV

8.3.Severity level and Performance criterion

8.3.1. Severity level

Level	Test Voltage Contact Discharge (kV)	Test Voltage Air Discharge (kV)
1.	2	2
2.	4	4
3.	6	8
4.	8	15
X.	Special	Special

Performance criterion: **B**

8.4.EUT Configuration on Test

The configuration of EUT is listed in Section 4.4.

8.5.Operating Condition of EUT

8.5.1. Setup the EUT as shown in Section 4.5. except the test set up replaced by section 8.1.

8.6.Test Procedure

8.6.1. Air Discharge**:**

This test is done on non-conductive surfaces. The round discharge tip of the discharge electrode shall be approached as fast as possible to touch the EUT.
After each discharge, the discharge electrode shall be removed from the EUT.
The generator is then re-triggered for a new single discharge and repeated 10 times for each pre-selected test point. This procedure shall be repeated until all the air discharge completed.

8.6.2. Contact Discharge**:**

All the procedure shall be same as Section 8.6.1 except that the tip of the discharge electrode shall touch the EUT before the discharge switch is operated.

8.7.Test Results

PASS

Please refer to the following page.

Electrostatic Discharge Test Results

Beide (Shenzhen) Product Service Limited

Date: 2022-10-24

Applicant	:	Nanyou cable (Shanghai) Co., Ltd.	Test Date	:	2022-10-24
EUT	:	NY-CABLE	Temperature	:	24℃
M/N	:	DRAG300	Humidity	:	53%
Test Voltage	:	--	Test Mode	:	ON
Test Engineer	:	Jack			

Air Discharge: ±8kV For each point positive 10 times and negative 10 times

Contact Discharge: ±4kV For each point positive 25 times and negative 25 times

Location	**Kind** A-Air Discharge C-Contact Discharge	**Result**
Slot of EUT	A	A
surface	A	A
Indirect Discharge(HCP)	C	A
Indirect Discharge(VCP)	C	A

Discharge should be considered on Contact and Air and Horizontal Coupling Plane (HCP) and Vertical Coupling Plane (VCP).

Reviewer: Austin.zhong

9. RF FIELD STRENGTH SUSCEPTIBILITY TEST

9.1.Block Diagram of Test Setup

9.1.1. Block diagram of Test Setup

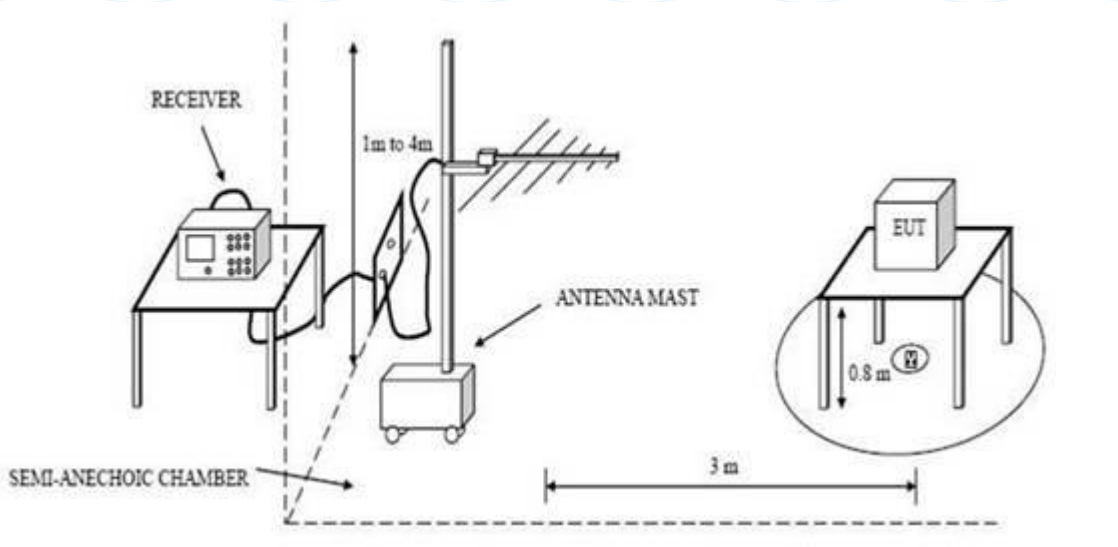

9.2.Test Standard

EN IEC 61000-6-1:2019 (EN 61000-4-3:2006+A2:2010)
Severity Level 2 at 3V/m

9.3.Severity level and Performance criterion

9.3.1. Severity level

Level	Field Strength V/m
1.	1
2.	3
3.	10
X.	Special

Performance criterion : **A**

9.4.EUT Configuration on Test

The configuration of EUT is listed in Section 4.4.

9.5.Operating Condition of EUT

Setup the EUT as shown in Section 9.1. The operating conditions of EUT are listed in section 4.5.

9.6.Test Procedure

The EUT and its simulators are placed on a turn table which is 0.8 meter above the ground. The EUT is set 3 meters away from the transmitting antenna which is mounted on an antenna tower. Both horizontal and vertical polarization of the antenna are set on test. Each of the four sides of EUT must be faced this transmitting antenna and measured individually. In order to judge the EUT performance, a CCD camera is used to monitor the EUT.
All the scanning conditions are as follows**:**

Condition of Test	Remarks
1. Fielded Strength	3V/m
2. Radiated Signal	Modulated
3. Scanning Frequency	-
4. Sweeping time of radiated	0.0015 decade/s
5. Dwell Time	1 Sec.

9.7.Test Results

N/A

Please refer to the following page.

RF Field Strength Susceptibility Test Results

Beide (Shenzhen) Product Service Limited

Date: 2022-10-24

Applicant	: Nanyou cable (Shanghai) Co., Ltd.	Test Date	: 2022-10-24
EUT	: NY-CABLE	Temperature	: 24℃
M/N	: DRAG300	Humidity	: 53%
Test Voltage	: --	Test Mode	: ON
Test Engineer	: Jack	Frequency Range	: -

Modulation: ☑ AM ☐ Pulse ☐none 1 kHz 80%

Criterion : A

	Frequency Range: 80MHz-6.0 GHz	
Steps	1%	1%
	Horizontal	Vertical
Front	N/A	N/A
Right	N/A	N/A
Rear	N/A	N/A
Left	N/A	N/A

Reviewer : Austin.zhong

10. ELECTRICAL FAST TRANSIENT/BURST TEST

10.1. Block Diagram of Test Setup

10.1.1. Block diagram of Test Setup

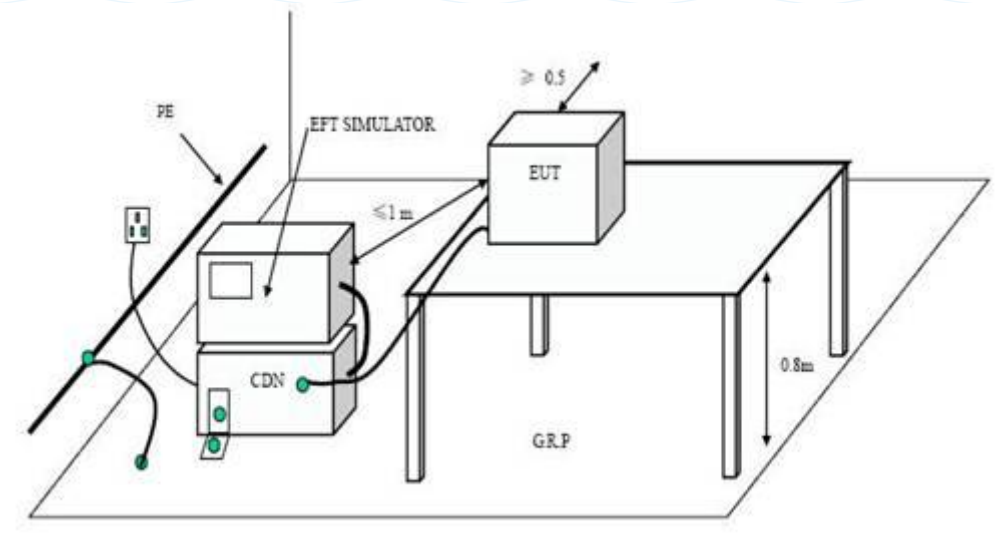

10.2. Test Standard

EN IEC 61000-6-1:2019 (EN 61000-4-4:2012)
Severity Level 2 at 1kV

10.3. Severity level and Performance criterion

10.3.1. Severity level

Open Circuit Output Test Voltage ±10%		
Level	On Power Supply Lines	On I/O (Input/Output) Signal data and control lines
1.	0.5 kV	0.25 kV
2.	1 kV	0.5 kV
3.	2 kV	1 kV
4.	4 kV	2 kV
X	Special	Special

Performance criterion : **B**

10.4. EUT Configuration on Test

The configuration of EUT is listed in Section 4.4.

10.5. Operating Condition of EUT

Setup the EUT as shown in Section 10.1. The operating condition of EUT is listed in section 4.5.

10.6. Test Procedure

The EUT is put on the table which is 0.8 meter high above the ground reference plane which is a min 1m*1m metallic sheet with 0.65mm minimum thickness. This reference ground plane shall project beyond the EUT by at least 0.8m on all sides and the minimum distance between the EUT and all other conductive structure, except the ground plane beneath the EUT, shall be more than 0.5m.

10.6.1. For input and output AC power ports**:**

The EUT is connected to the power mains by using a coupling device which couples the EFT interference signal to AC power lines. Both polarities of the test voltage should be applied during compliance test and the duration of the test is 2 mins.

10.6.2. For signal lines and control lines ports**:**

It's unnecessary to test.

10.6.3. For DC output line ports**:**

It's unnecessary to test.

10.7. Test Results

N/A

Please refer to the following page.

Electrical Fast Transient/Burst Test Results

Beide (Shenzhen) Product Service Limited

Date: 2022-10-24

Applicant	:	Nanyou cable (Shanghai) Co., Ltd.	Test Date	:	2022-10-24
EUT	:	NY-CABLE	Temperature	:	24℃
M/N	:	DRAG300	Humidity	:	53%
Test Voltage	:	--	Test Mode	:	ON
Test Engineer	:	Jack			

Inject Place **:** AC Mains

Inject Line	Voltage kV	Inject Time(s)	Inject Method	Results	Inject Line	Voltage kV	Inject Time(s)	Inject Method	Results
AC Power Line	±1	120	Direct	N/A					
Signal line									
DC line									
L+N+PE									

Reviewer**:** Austin.zhong

11. SURGE TEST

11.1. Block Diagram of Test Setup

11.1.1. Block diagram of Test Setup

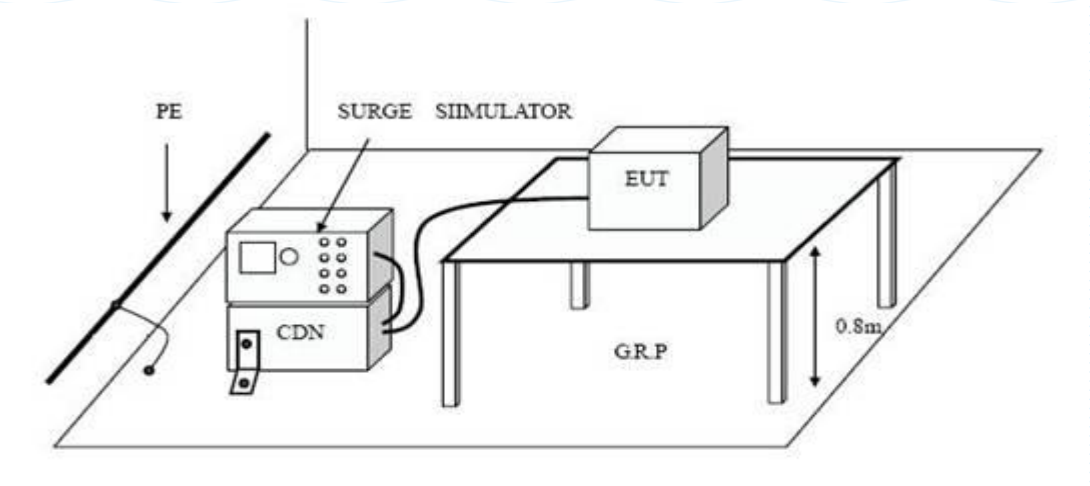

11.2. Test Standard

EN IEC 61000-6-1:2019 (EN 61000-4-5:2014+A1:2017)
Severity Level 2 at 1kV for line-line, Severity Level 3 at 2 kV for line-earth

11.3. Severity level and Performance criterion

11.3.1. Severity level

Severity Level	Open-Circuit Test Voltage kV
1	0.5
2	1.0
3	2.0
4	4.0
*	Special

Performance criterion : **B**

11.4. EUT Configuration on Test

The configuration of EUT is listed in Section 4.4.

11.5. Operating Condition of EUT

Setup the EUT as shown in Section 11.1. The operating condition of EUT is listed in section 4.5.

11.6. Test Procedure

1) Set up the EUT and test generator as shown on section 11.1.
2) For line to line coupling mode, provide a 1kV 1.2/50us voltage surge (at open-circuit condition) and 8/20us current surge to EUT selected points.
3) At least 5 positive and 5 negative (polarity) tests with a maximum 1/min repetition rate are conducted during test.
4) Different phase angles are done individually.
5) Repeat procedure 2) to 4) except the open-circuit test voltage change from 1kV to 2kV for line to earth coupling mode test.
6) Record the EUT operating situation during compliance test and decide the EUT immunity criterion for above each test.

11.7. Test Results

N/A

Please refer to the following page.

Beide
Compliance Laboratory

Surge Immunity Test Results

Beide (Shenzhen) Product Service Limited

Date : 2022-10-24

Applicant : Nanyou cable (Shanghai) Co., Ltd.	Test Date : 2022-10-24
EUT : NY-CABLE	Temperature : 24℃
M/N : DRAG300	Humidity : 53%
Test Voltage : --	Test Mode : ON

Location	Polarity	Phase Angle	No of Pulse	Pulse Voltage (kV) IEC 61000-4-5	Result	
L1-N	±	0	5	1	A	N/A
	±	90	5	1		N/A
	±	180	5	1		N/A
	±	270	5	1		N/A
L1-PE	±	0	5	2	A	N/A
	±	90	5	2		N/A
	±	180	5	2		N/A
	±	270	5	2		N/A
N-PE	±	0	5	2	A	N/A
	±	90	5	2		N/A
	±	180	5	2		N/A
	±	270	5	2		N/A
Remark:						

Reviewer: Austin.zhang

12. INJECTED CURRENTS SUSCEPTIBILITY TEST

12.1. Block Diagram of Test Setup

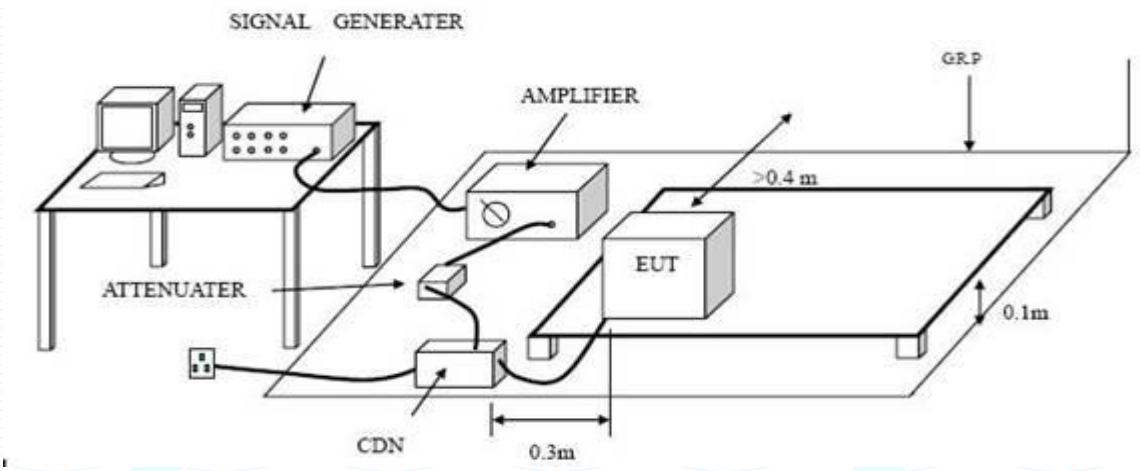

12.2. Test Standard

EN IEC 61000-6-1:2019 (EN 61000-4-6:2014+AC:2015)
Severity Level 2 at 3V (rms), 0.15MHz ~ 80MHz

12.3. Severity Levels and Performance Criterion

12.3.1 Severity level

Level	Field Strength V/m
1.	1
2.	3
3.	10
X	Special

Performance criterion**: A**

12.4. EUT Configuration on Test

The configuration of EUT is listed in Section 4.4.

12.5. Operating Condition of EUT

12.5.1 Setup the EUT as shown in Section 12.1.
12.5.2 Turn on the power of all equipments.

12.6. Test Procedure

1) Set up the EUT, CDN and test generators as shown on Section 12.1.
2) Let the EUT work in test mode and test it.
3) The EUT are placed on an insulating support 0.8m high above a ground reference plane CDN(coupling and decoupling device) is placed on the ground plane about 0.3m from EUT. Cables between CDN and EUT are as short as possible, and their height above the ground reference plane shall be between 30 and 50 mm (where possible).
4) The disturbance signal described below is injected to EUT through CDN.
5) The EUT operates within its operational mode(s) under intended climatic conditions after power on.
6) The frequency range is swept from 150kHz to 80MHz using 3V signal level, and with the disturbance signal 80% amplitude modulated with a 1 kHz sine wave.
7) The rate of sweep shall not exceed $1.5*10^{-3}$decades/s. Where the frequency is swept incrementally, the step size shall not exceed 1% of the start and thereafter 1% of the preceding frequency value.
8) Recording the EUT operating situation during compliance testing and decide the EUT immunity criterion.

12.7. Test Results

N/A

Please refer to the following page.

Injected Currents Susceptibility Test Results

Beide (Shenzhen) Product Service Limited

Date: 2022-10-24

Applicant : Nanyou cable (Shanghai) Co., Ltd.	Test Date : 2022-10-24
EUT : NY-CABLE	Temperature : 24℃
M/N : DRAG300	Humidity : 53%
Test Voltage : --	Test Mode : ON
Test Engineer : Jack	

Frequency Range (MHz)	Injected Position	Strength	Criterion	Result
0.15 ~ 80	AC Mains	3V(rms), Unmodulated	A	N/A

Remark : 1. Modulation Signal:1kHz 80% AM	Note:

Reviewer: Austin.zhang

13.MAGNETIC FIELD IMMUNITY TEST

13.1.Block Diagram of Test Setup

13.1.1.Block Diagram of the EUT

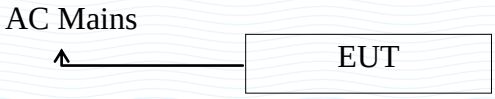

13.1.2.Block Diagram of Test Setup

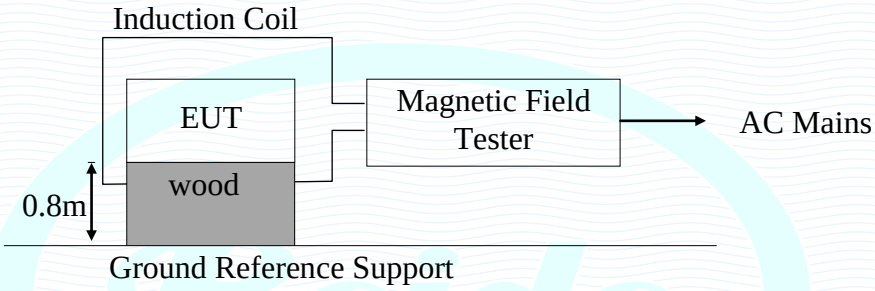

13.2.Test Standard

EN IEC 61000-6-1:2019 (EN 61000-4-8:2010)
Severity Level 2 at 3A/m

13.3.Severity Levels and Performance Criterion

13.3.1.Severity level

Level	Magnetic Field Strength A/m
1.	1
2.	3
3.	10
4.	30
5.	100
X.	Special

Performance criterion: **A**

13.4.EUT Configuration on Test

The test must be used to find severity level in different phrase performance criterion during test.
The configuration of EUT is same as used in the test.

13.5.Operating Condition of EUT

13.5.1. Setup the EUT as shown in Section 13.1.1 and 13.1.2
13.5.2. Turn on the power of all equipments.
13.5.3. Let the EUT work in test mode (ON) and test it.

13.6.Test Procedure

The EUT shall be subjected to the test magnetic field by using the induction coil of standard dimensions (1m×1m) and shown in Section 13.1.1.and 13.1.2 The induction coil shall then be rotated by 90 °in order to expose the EUT to the test field with different orientations

13.7.Test Results

N/A
Please refer to the following page.

Magnetic Field Immunity Test Results

Beide (Shenzhen) Product Service Limited

Date: 2022-10-24

Applicant : Nanyou cable (Shanghai) Co., Ltd.	Test Date : 2022-10-24
EUT : NY-CABLE	Temperature : 24℃
M/N : DRAG300	Humidity : 49%
Test Mode: ON	Test Engineer : Jack
Test Volgate: --	

Test Level	Testing Duration	Coil Orientation	Criterion	Result
3A/m	5 mins	X	A	N/A
3A/m	5 mins	Y	A	N/A
3A/m	5 mins	Z	A	N/A

Remark:	Test Equipment : Magnetic Field Tester EM TEST

Reviewer: Austin.zhang

14. VOLTAGE DIPS AND INTERRUPTIONS TEST

14.1. Block Diagram of Test Setup

14.1.1. Block diagram of Test Setup

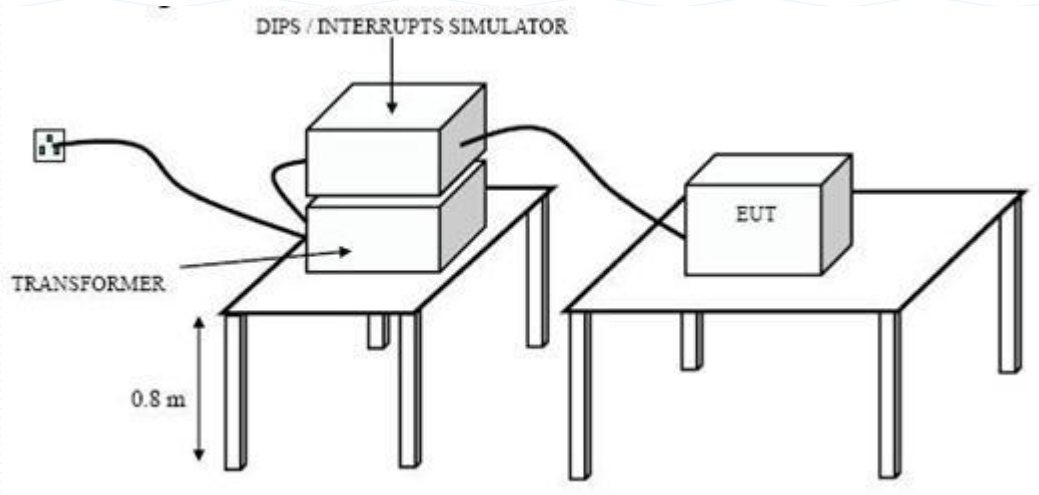

14.2. Test Standard

EN IEC 61000-6-1:2019 (EN 61000-4-11:2004+A1:2017)

14.3. Severity level and Performance criterion

14.3.1. Severity level

Test Level $\%U_T$	Voltage dip and short interruptions $\%U_T$	Duration (in period)
0	100	1P
40	100	10/12P
70	30	25/30P
0	100	250/300P

Performance criterion : B&C

14.4. EUT Configuration

The configuration of EUT is listed in section 4.4

14.5. Operating Condition of EUT

14.5.1. Setup the EUT as shown on Section 14.1.
14.5.2. Turn on the power of all equipments.
14.5.3. Let the EUT work in test mode (ON) and measure it and test it.

14.6. Test Procedure

1) Set up the EUT and test generator as shown on section 14.1.
2) The interruption is introduced at selected phase angles with specified duration. There is a 3mins minimum interval between each test event.
3) After each test a full functional check is performed before the next test.
4) Repeat procedures 2 & 3 for voltage dips, only the test level and duration is changed. Record any degradation of performance.

14.7. Test Results

N/A

Please refer to the following page.

Voltage Dips And Interruptions Test Results

Beide (Shenzhen) Product Service Limited

Date : 2022-10-24

Applicant : Nanyou cable (Shanghai) Co., Ltd. EUT : NY-CABLE M/N : DRAG300 Test Voltage : --	Test Date : 2022-10-24 Temperature : 24℃ Humidity : 53%
☒ Single Test Voltage	☐ Dual Test Voltage

Test Mode: ON

Test Level % U_T	Voltage Dips & Short Interruptions % U_T	Duration (in period)	Phase Angle	Result Criterion	
0	100	1P	0-360	B	N/A
40	60	10P	0-360	B	N/A
70	100	25P	0-360	A	N/A
0	100	250P	0-360	B	N/A

Remark: U_T is the rated voltage for the equipment.

Reviewer: Austin.zhang

APPENDIX I
(Photos of the EUT)

Figure 1
APPEARANCE OF EUT

Figure 2
APPEARANCE OF EUT